PARTS DRAWING

MASTER CLIMATE SOLUTIONS

240 Volt
Indirect Diesel
Oil Heater

Product Code:
BV290E

Serial Number Range:

Year Of Manufacture: 2013

KEEP THIS BOOKLET FOR FUTURE REFERENCE

Nottingham: 0115 946 1988
London: 0208 830 3333

www.hscgroupuk.co.uk
The Hire Supply Company (UK) Limited

Nottingham: sales@hscgroupuk.co.uk
London: sean@hscgroupuk.co.uk

BV 290 MODEL 2013

From Serial Number: 09233000649

Edizione 2013
Rev. A

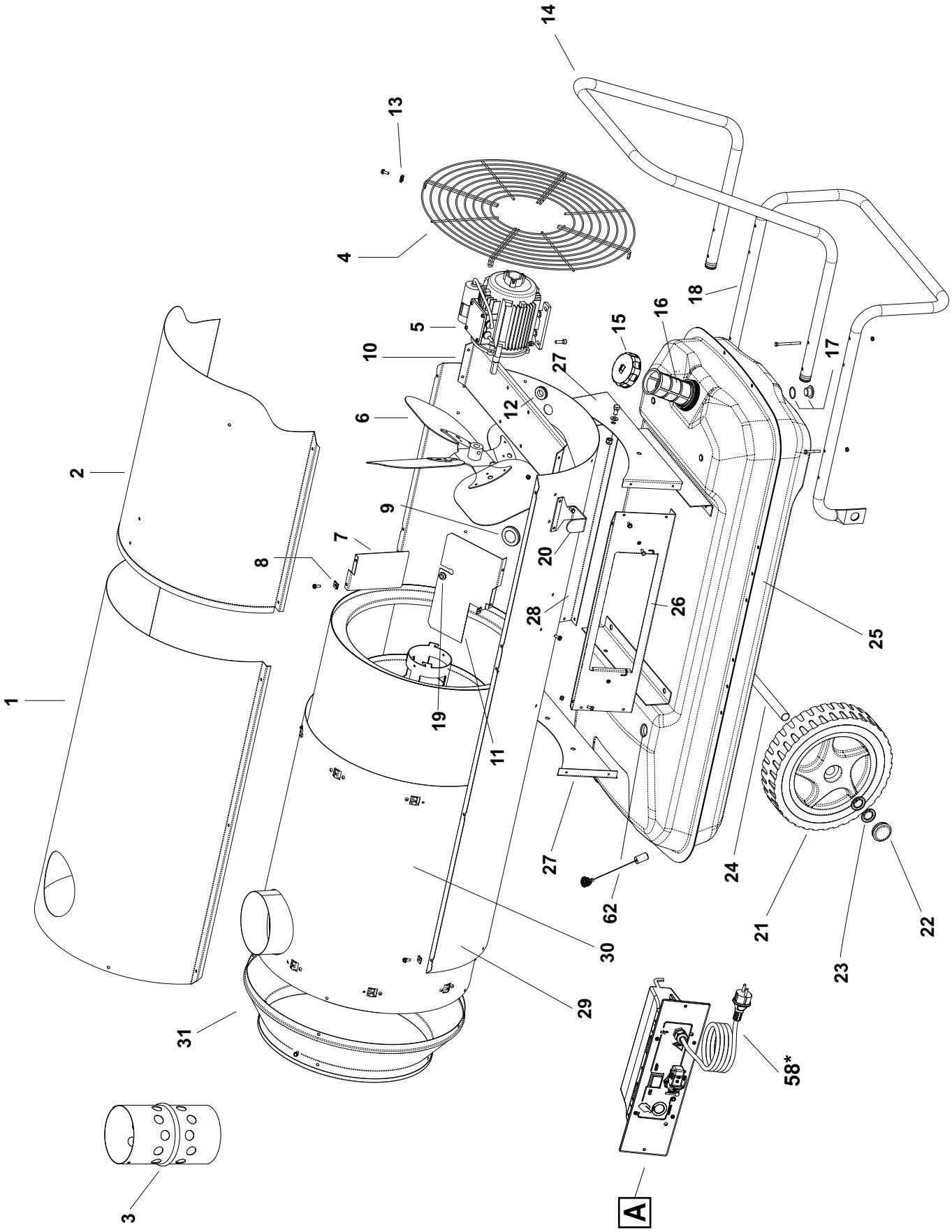

BV 290 MODEL 2013

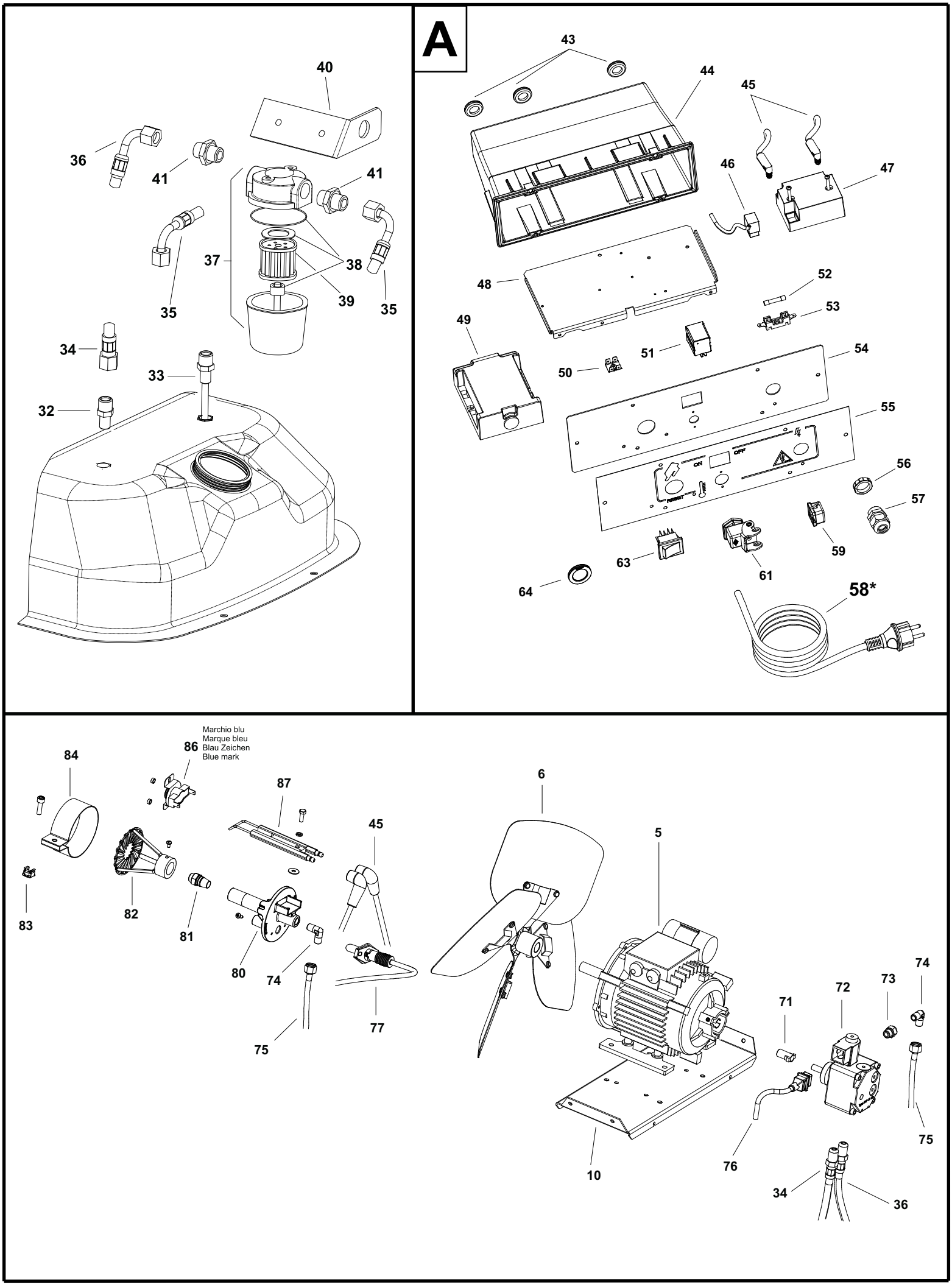

Pos.	Code NR	Description
1	4032.456	UPPER BODY
2	4033.263	UPPER BODY MOBILE
3	4032.534	CHIMNEY
4	4032.465	INLET GRILL
5	4032.431	MOTOR 4P 750 W
6	4032.430	FAN
7	4032.518	CENTRAL AIR FLAP
8	4104.170	CLIP NUT
9	4111.056	PROTECTION CABLE
10	4032.463	MOTOR FLANGE SUPPORT
11	4032.462	AIR FLAP
12	4160.646	PROTECTION CABLE
13	4111.241	ELASTIC PLATE
14	4032.480	HANDLE FRAME
15	4260.100	TANK CAP
16	4290.083	TANK FILTER
17	4100.632	DRAIN PLUG
18	4032.476	FOOT FRAME
19	4101.151	PROTECTION CABLE
20	4032.536	POWER CORD HOOK
21	4110.978	WHEEL
22	4111.480	WHEEL PLUG
23	4111.072	WHEEL HOLDER
24	4032.478	AXLE
25	4033.243	FUEL TANK
26	4032.466	ELECTR. COMPONENTS DRAWER PANEL
27	4032.470	LATERAL PANEL
28	4032.468	REAR PANEL
29	4033.264	LOWER BODY
30	4033.190	COMBUSTION CHAMBER
31	4033.223	OUTLET CONE
32	4031.068	CONN. STRAIGHT 1/4"
33	4031.067	PIPE CONNECTION 1/4"
34	4031.062	FUEL PIPE PUMP-TANK
35	4031.063	FUEL PIPE TANK-FILTER
36	4031.061	FUEL PIPE FILTER-PUMP
37	4031.070	FILTER WITH CARTIDGE 3/8"
38	4111.116	OR KIT FILTER
39	4031.015	FILTER CARTIDGE

Pos.	Code NR	Description
40	4032.437	FILTER SUPPORT
41	4031.064	DOUBLE SCREW
43	4162.500	PROTECTION CABLE
44	4033.257	PLASTIX BOX
45	4110.490	HT CABLE
46	4033.256	TRANSFORMER POWER CORD
47	4031.541	TRANSFORMER
48	4033.249	CONTROL BASE
49	4033.250	CONTROL BOX
50	4160.639	POP RIVET 4 WAY
51	4111.032	RELAY
52	4111.040	FUSE
53	4033.301	FUSE HOLDER
54	4033.248	FRONTAL CONTROLS PANEL
55	4033.254	PANEL LABEL
56	4100.656	LOCKNUT
57	4150.528	STRAIN RELIEF BUSHING
58	4033.253	POWER CORD SCHUKO
58-A	4033.252	POWER CORD NEW ZEALAND
58-B	4033.302	POWER CORD UK
59	4162.467	CAP FOR THERMOSTAT SOCKET
61	4111.119	THERMOSTAT SOCKET
62	4260.105	FUEL GAUGE
63	4165.204	ROCKER SWITCH
64	4033.251	BOARD BUTTON CAP
71	4111.081	COUPLING
72	4033.122	PUMP
73	4161.501	CONN. STRAIGHT 1/8"
74	4033.198	ELBOW 1/8"
75	4033.186	OIL SUPPLY PIPE
76	4033.087	PUMP POWER CORD
77	4033.246	PHOTOCELL
80	4033.059	BURNER FLANGE
81	4031.030	NOZZLE
82	4033.071	TURBO DISC
83	4032.454	M6 NUT
84	4032.453	AIR REGOLATION FLAP
86	4031.047	LIMIT THERMOSTAT
87	4111.826	ELECTRODE

Recycling

ENVIRONMENTAL PROTECTION: Please recycle any unwanted materials as opposed to disposing them as general waste. It is recommended the original is retained and used to store the product when not in use for prolonged periods of time. If this is not applicable ensure the materials are sorted and recycled in accordance with local regulations.

SPECIFICATION CHANGE: It is out policy to continually improve products to ensure these meet the rigours of the industry we serve. Therefore, as such we reserve the right to alter specifications, data and components parts without prior notice.

WARRANTY: Please refer to the manufactures terms & conditions

IMPORTANT: No liability will be accepted for the incorrect use of this product.