PARTS DRAWING

MASTER CLIMATE SOLUTIONS

240v
Indirect Diesel
Oil Heater

Product Code:
BV170E

Serial Number Range:

Year Of Manufacture: 2017

KEEP THIS BOOKLET FOR FUTURE REFERENCE

Nottingham: 0115 946 1988
London: 0208 830 3333

ww.hscgroupuk.co.uk
The Hire Supply Company (UK) Limited

Nottingham: sales@hscgroupuk.co.uk
London: sean@hscgroupuk.co.uk

MODEL BV170 E

UNIT 1 **ILLUSTRATED PARTS BREAKDOWN**

From Serial Number: 11237000286

Rev.H - Jan. 2017

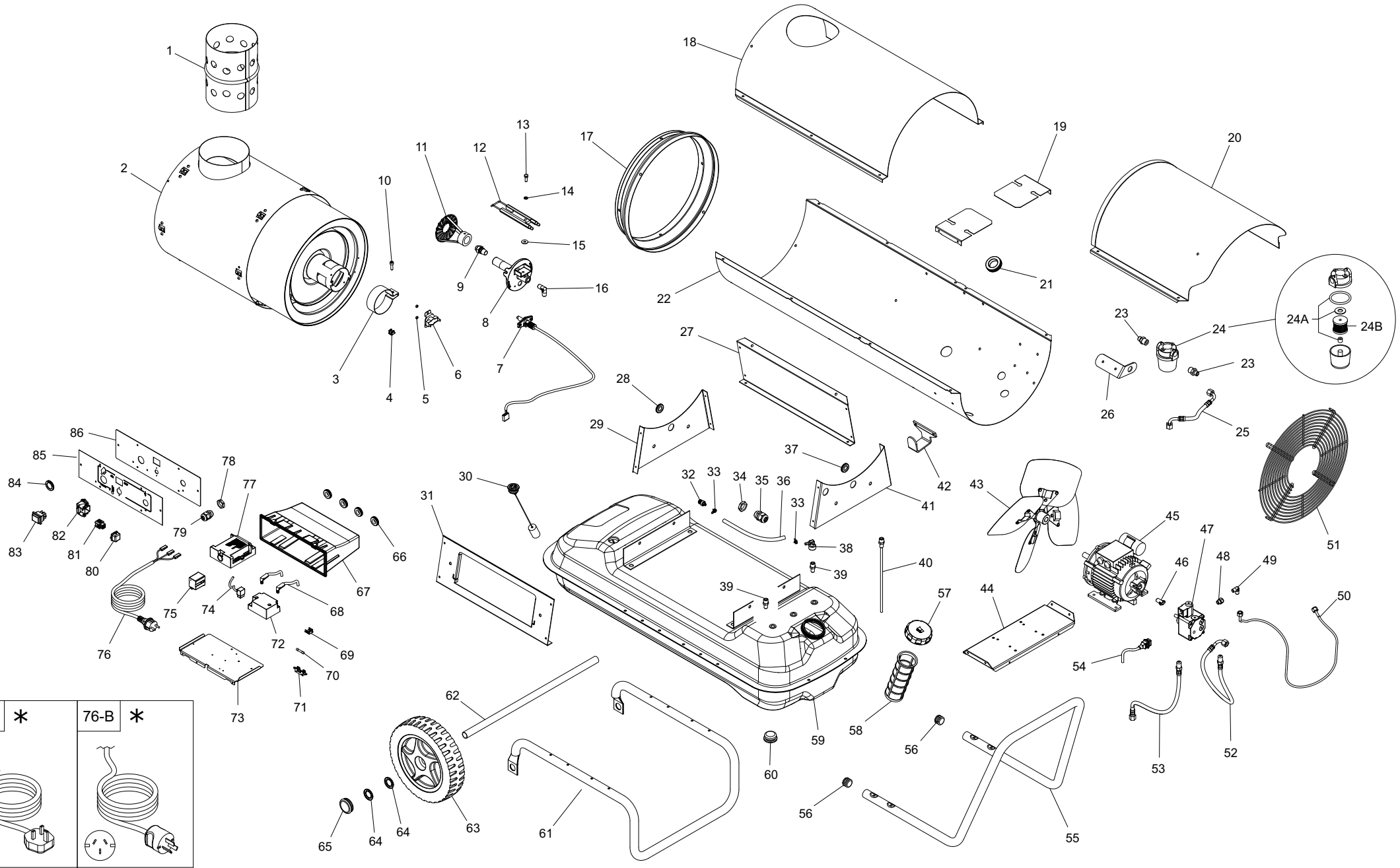

76-A *	76-B *
POWER CORD UK (type G)	POWER CORD NEW ZL (type I)

ESP00137

Pos.	Code NR	Description
1	4032.534	CHIMNEY
2	4033.188	COMBUSTION CHAMBER
3	4032.545	AIR DAMPER
4	4032.454	CAGE NUT
5	4032.692	SPACER
6	4031.047	SAFETY THERMOSTAT
7	4033.246	PHOTOCELL SENSOR
8	4033.034	BURNER HEAD
9	4031.025	NOZZLE
10	4032.455	SCREW
11	4033.071	BURNER HEAD DIFFUSER
12	4111.826	BIFILAR ELECTRODES
13	4110.363	SCREW
14	4110.393	ELASTIC WASHER
15	4110.394	FIBER WASHER
16	4033.198	90° FUEL CONNECTION
17	4031.659	OUTLET CONE
18	4032.546	UPPER SHELL
19	4032.554	AIR DEFLECTOR
20	4032.548	UPPER SHELL - MOBILE
21	4111.056	GASKET
22	4032.550	LOWER SHELL
23	4034.378	STRAIGHT FUEL CONNECTION
24	4031.070	FUEL FILTER
24A	4111.116	OR FILTER KIT
24B	4031.015	FILTER CARTRIDGE
24C	4031.180	FILTER HOUSING
25	4031.063	FUEL PIPE - FILTER TANK
26	4032.437	FILTER BRACKET
27	4032.560	LATERAL PANEL
28	4162.500	GASKET
29	4033.095	FRONT PANEL
30	4260.105	FUEL GAUGE
31	4032.558	LATERAL CONTROL PANEL
32	4260.246	BREATH VALVE
33	4100.810	CLIP
34	4100.656	NUT
35	4150.528	STRAIN RELIEF
36	4100.204	RUBBER PIPE
37	4162.500	GASKET
38	4100.192	90° AIR CONNECTION
39	4031.068	STRAIGH CONNECTION
40	4031.067	SUCTION PIPE
41	4034.293	REAR PANEL
42	4032.536	POWER CORD BRACKET
43	4032.593	FAN
44	4032.555	MOTOR SUPPORT

Pos.	Code NR	Description
45	4032.594	MOTOR
46	4111.081	MOTOR PUMP COUPLING
47	4111.042	FUEL PUMP
48	4161.501	STRAIGHT FUEL CONNECTION
49	4033.198	90° FUEL CONNECTION
50	4033.186	FUEL FLEXIBLE PIPE
51	4032.557	GRILLE
52	4031.061	FUEL PIPE - PUMP-FILTER
53	4031.062	FUEL PIPE - PUMP-TANK
54	4033.311	PUMP VALVE POWER CORD
55	4032.568	HANDLE
56	4111.057	HANDLE CAP
57	4034.283	TANK CAP
58	4290.213	TANK FILTER
59	4034.290	TANK
60	4100.632	TANK DRAIN CAP
61	4032.564	WHEELS SUPPORT
62	4032.566	WHEELS AXLE
63	4032.094	WHEEL
64	4111.072	BLOCK WASHER
65	4111.480	WHEEL CAP
66	4160.646	GASKET
67	4033.257	PLASTIC BOX
68	4110.490	HIGH TENSION WIRE
69	4160.639	GROUND FASTON
70	4111.040	FUSE
71	4033.301	FUSE HOLDER
72	4031.541	HIGH TENSION TRANSFORMER
73	4033.249	CONTROL PANEL BASE
74	4033.256	HIGH TENSION TRANSFORMER POWER CORD
75	4111.032	RELAY
76	4033.253	POWER CORD SCHUKO
76A	4033.302	POWER CORD UK
76B	4033.252	POWER CORD NEW ZEALAND
77	4033.250	PC-BOARD
78	4100.656	NUT
79	4150.528	STRAIN RELIEF
80	4162.467	THERMOSTAT CAP
81	4161.400	THERMOSTAT PLUG
82	4160.647	THERMOSTAT SOCKET
83	4165.204	SWITCH
84	4033.251	PC-BOARD CAP
85	4033.254	CONTROL PANEL LABEL
86	4033.248	CONTROL PANEL

Recycling

ENVIRONMENTAL PROTECTION: Please recycle any unwanted materials as opposed to disposing them as general waste. It is recommended the original is retained and used to store the product when not in use for prolonged periods of time. If this is not applicable ensure the materials are sorted and recycled in accordance with local regulations.

SPECIFICATION CHANGE: It is out policy to continually improve products to ensure these meet the rigours of the industry we serve. Therefore, as such we reserve the right to alter specifications, data and components parts without prior notice.

WARRANTY: Please refer to the manufactures terms & conditions

IMPORTANT: No liability will be accepted for the incorrect use of this product.