PARTS DRAWING

Propane Gas Bin Heater

Product Code: BH25

Serial Number Range:

Year Of Manufacture:

KEEP THIS BOOKLET FOR FUTURE REFERENCE

Nottingham: 0115 946 1988
London: 0208 830 3333

www.hscgroupuk.co.uk
The Hire Supply Company (UK) Limited

Nottingham: sales@hscgroupuk.co.uk
London: sean@hscgroupuk.co.uk

GF85LP爆炸图

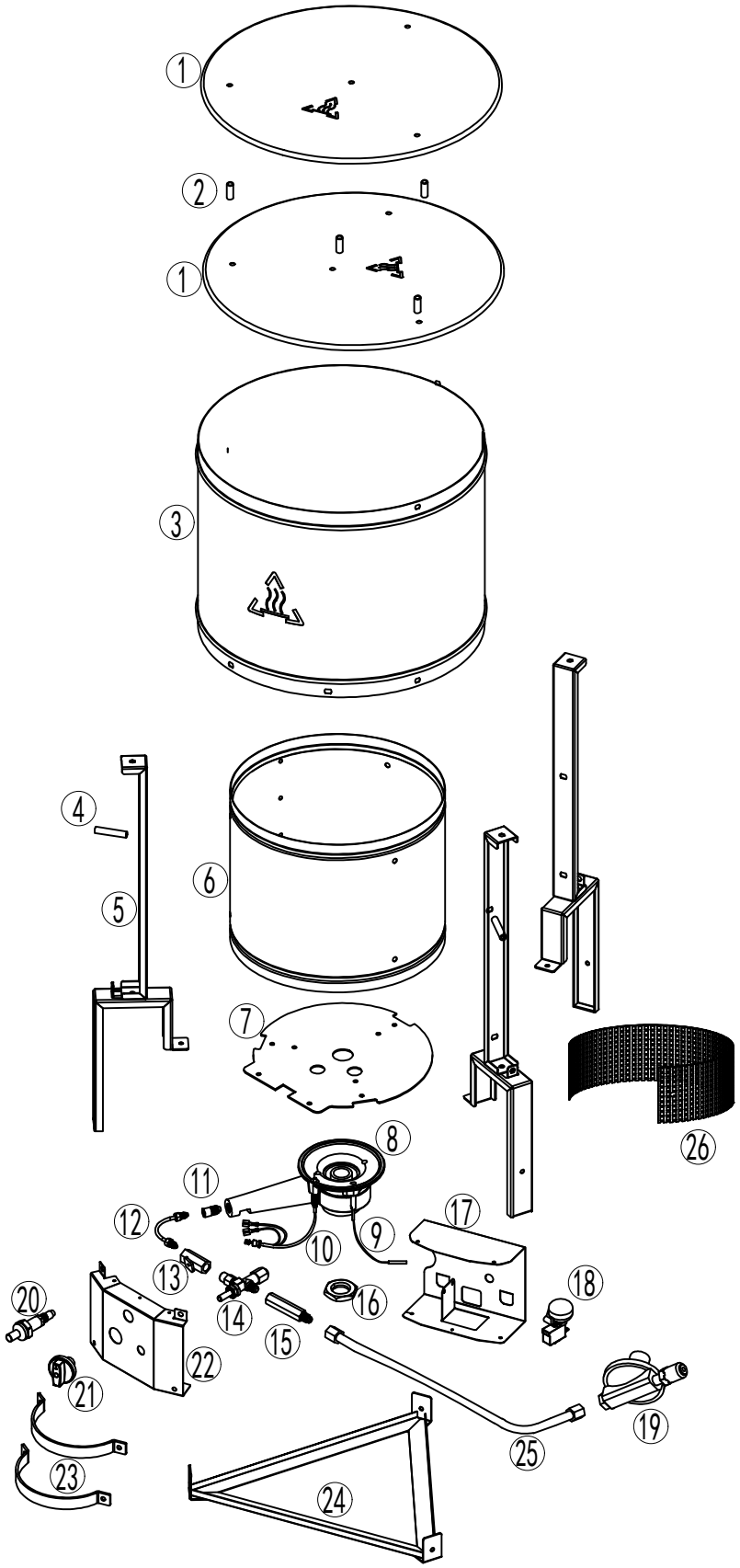

Part list

NO.	Description		Quantity
1	cap	上盖	2
2	short spacer support	短间隔柱	4
3	outside cylinder	外筒	1
4	long spacer support	长间隔柱	3
5	long leg	脚	3
6	inner cylinder	内筒	1
7	fixing plate	燃烧器固定板	1
8	burner	燃烧器	1
9	spark	点火针	1
10	thermocouple	热电偶	1
11	nozzle	喷嘴	1
12	gas pipe	导气管	1
13	ball valve	球阀	1
14	gas valve	控制阀	1
15	gas connector	进气接头	1
16	nut for burner	燃烧器固定螺母	1
17	heat shield	隔热板	1
18	tilt switch	倾倒开关	1
19	gas regulator	减压阀	1
20	ignitor	压电点火器	1
21	knob	旋钮	1
22	face panel	面板	1
23	protection handle	防护架	2
24	tri-angle	脚架强架	1
25	rubber hose	胶管	1
26	guard mesh	防护网	1

Recycling

ENVIRONMENTAL PROTECTION: Please recycle any unwanted materials as opposed to disposing them as general waste. It is recommended the original is retained and used to store the product when not in use for prolonged periods of time. If this is not applicable ensure the materials are sorted and recycled in accordance with local regulations.

SPECIFICATION CHANGE: It is out policy to continually improve products to ensure these meet the rigours of the industry we serve. Therefore, as such we reserve the right to alter specifications, data and components parts without prior notice.

WARRANTY: Please refer to the manufactures terms & conditions

IMPORTANT: No liability will be accepted for the incorrect use of this product.